Section F – Contents

Repair Clamps

F 1.1	Emergency Clamp – 3/4” x 3”	**10/98**
F 1.2	Emergency Clamp – 3/4” x 6”	**10/98**
F 1.3	Emergency Clamp – 1” x 3”	**10/98**
F 1.4	Emergency Clamp – 1” x 6”	**10/98**
F 1.5	Emergency Clamp – 1¼” x 3”	**10/98**
F 1.6	Emergency Clamp – 1¼” x 6”	**10/98**
F 1.7	Emergency Clamp – 1½” x 3”	**10/98**
F 1.8	Emergency Clamp – 1½” x 6”	**10/98**
F 1.9	Emergency Clamp – 2” x 3”	**10/98**
F 1.10	Emergency Clamp – 2” x 6”	**10/98**
F 1.11	Emergency (HPDE) Clamp – 2” x 8”	**7/99**
F 2.1	Emergency Clamp – 3” x 10”	**10/98**
F 2.2	Emergency Clamp – 3” x 15”	**10/98**
F 2.3	Emergency Clamp – 4” x 10”	**1/03**
F 2.3a	Emergency (HPDE) Clamp – 4” x 12”	**7/99**
F 2.4	Emergency Clamp – 4” x 15”	**1/03**
F 2.5	Emergency Clamp – 6” x 10”	**1/03**
F 2.6	Emergency Clamp – 6” x 20”	**1/03**
F 2.7	Emergency Clamp – 8” x 10”	**1/03**
F 2.8	Emergency Clamp – 8” x 20”	**1/03**
F 2.9	Emergency Clamp – 10” x 10”	**1/03**
F 2.10	Emergency Clamp – 10” x 20”	**1/03**
F 2.11	Emergency Clamp – 12” x 10”	**1/03**
F 2.12	Emergency Clamp – 12” x 18”	**1/03**
F 2.13	Galvanized Full Circle Leak Repair Clamp 2”	**4/08**

OUC

The *Reliable* One®

Section F – Contents

Repair Clamps

F 3.1	Emergency Clamp – 16” x 12”	**11/98**
F 3.2	Emergency Clamp – 16” x 20”	**11/98**
F 3.3	Emergency Clamp – 20” x 12”	**11/98**
F 3.4	Emergency Clamp – 20” x 18”	**11/98**
F 3.5	Emergency Clamp – 24” x 12”	**11/98**
F 3.6	Emergency Clamp – 24” x 18”	**11/98**
F 3.7	Emergency Clamp – Extended Length 30” Long	**12/99**
F 4.1	Bell Joint Leak Clamp – 4” x 12”	**11/98**
F 4.2	Bell Joint Leak Clamp – 16” x 24”	**2/00**

OUC
The *Reliable* One®

Material Specifications F 1.1

Emergency Clamp – ¾” x 3”

AKA

Material:

Band: Stainless steel – type 304.
Lugs: Malleable iron, ductile iron or stainless steel.
Bolts & Nuts: Stainless steel.
Gasket: Grade 60, neoprene or equal.

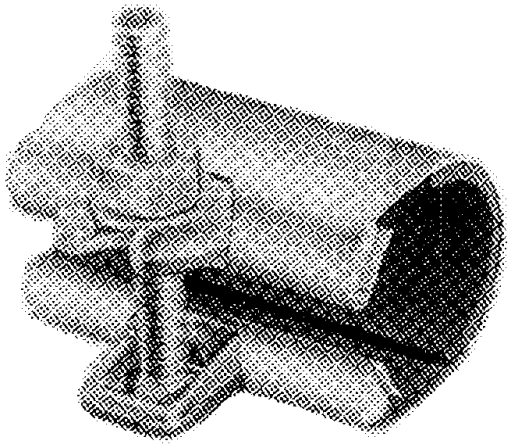

Size/Details	OUC Item ID	Manufacturer	**Catalog Number**
¾” x 3”	073-05334	APAC Products	**441-105-3**
		Dresser Mfg.	Style 118-005
		Ford Meter Box	FSC - 12 x 3”
		JCM Ind.	110-0105-3-SS
		Mueller	220-3-105
		Power Seal	3151-AS
		Smith-Blair	245-0105-03-001

Revision Date: 10/27/98 (DSW)

OUC The *Reliable* One®

Material Specifications
Water Business Unit
ORLANDO UTILITIES COMMISION

Material Specifications F 1.2

Emergency Clamp – ¾” x 6”

AKA

Material:

Band: Stainless steel – type 304.
Lugs: Malleable iron, ductile iron or stainless steel.
Bolts & Nuts: Stainless steel.
Gasket: Grade 60, neoprene or equal.

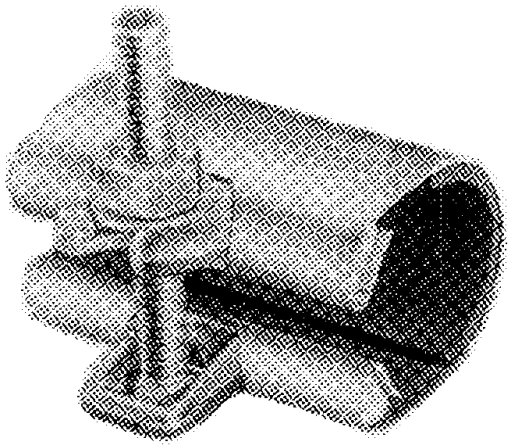

Size/Details	OUC Item ID	Manufacturer	**Catalog Number**
¾” x 6”	073-05634	APAC Products	**441-105-6**
		Dresser Mfg.	Style 118-0006
		Ford Meter Box	FSC - 12 x 6”
		JCM Ind.	110-0105-6-SS
		Mueller	220-6-105
		Power Seal	3151-AS
		Smith-Blair	245-0105-06-001

Revision Date: 10/27/98 (DSW)

The *Reliable* One®

Material Specifications
Water Business Unit
ORLANDO UTILITIES COMMISION

Material Specifications F 1.3

Emergency Clamp – 1” x 3”

AKA

Material:

Band: Stainless steel – type 304.
Lugs: Malleable iron, ductile iron or stainless steel.
Bolts & Nuts: Stainless steel.
Gasket: Grade 60, neoprene or equal.

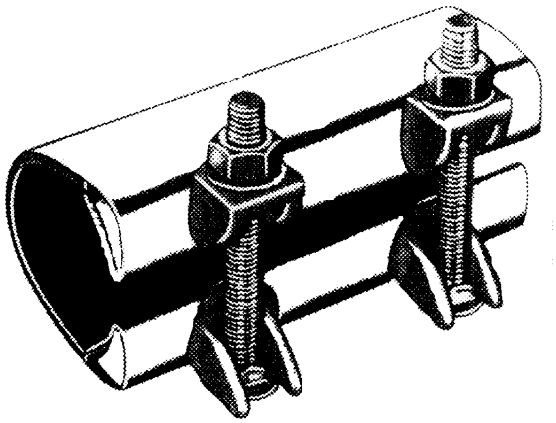

Size/Details	OUC Item ID	Manufacturer	Catalog Number
1” x 3”	073-05301	APAC Products	**441-132-3**
		Dresser Mfg.	Style 118-0010
		Ford Meter Box	FSC – 13 x 3”
		JCM Ind.	110-0132-3-SS
		Mueller	220-3-131
		Power Seal	3151-AS
		Smith-Blair	245-0132-03-001

Revision Date: 10/27/98 (DSW)

OUC The *Reliable* One®

Material Specifications
Water Business Unit
ORLANDO UTILITIES COMMISION

Material Specifications F 1.4

Emergency Clamp – 1” x 6”

AKA

Material:

Band: Stainless steel – type 304.
Lugs: Malleable iron, ductile iron or stainless steel.
Bolts & Nuts: Stainless steel.
Gasket: Grade 60, neoprene or equal.

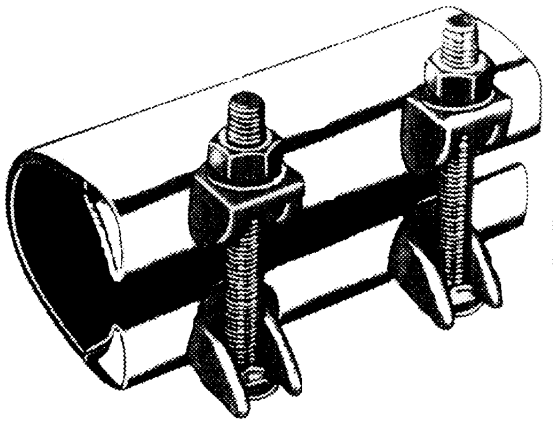

Size/Details	OUC Item ID	Manufacturer	Catalog Number
1” x 6”	073-05601	APAC Products	**441-132-6-SS**
		Dresser Mfg.	Style 118-0010
		Ford Meter Box	FSC – 13 x 6”
		JCM Ind.	110-0132-6-SS
		Mueller	220-6-131
		Power Seal	3151-AS
		Smith-Blair	245-0132-06-001

Revision Date: 10/27/98 (DSW)

OUC The *Reliable* One®

Material Specifications
Water Business Unit
ORLANDO UTILITIES COMMISION

Material Specifications F 1.5

Emergency Clamp – 1¼” x 3”

AKA

Material:

Band: Stainless steel – type 304.
Lugs: Malleable iron, ductile iron or stainless steel.
Bolts & Nuts: Stainless steel.
Gasket: Grade 60, neoprene or equal.

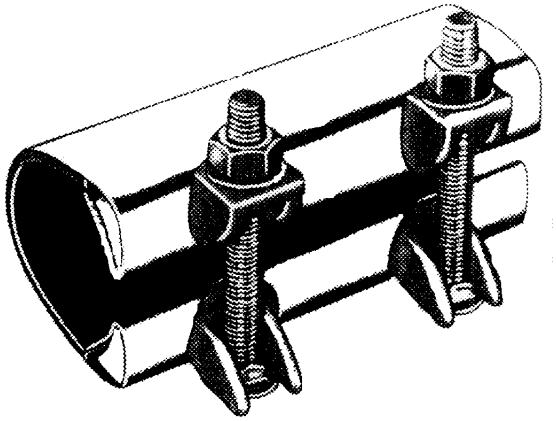

Size/Details	OUC Item ID	Manufacturer	Catalog Number
1¼” x 3”	073-05354	APAC Products	**441-166-3-SS**
		Dresser Mfg.	Style 118-0013
		Ford Meter Box	FSC – 17 x 3”
		JCM Ind.	110-0166-3-SS
		Mueller	220-3-166
		Power Seal	3151-AS
		Smith-Blair	245-0166-03-001

Revision Date: 10/27/98 (DSW)

OUC The Reliable One

Material Specifications
Water Business Unit
ORLANDO UTILITIES COMMISION

Material Specifications F 1.6

Emergency Clamp – 1¼” x 6”

AKA

Material:

Band: Stainless steel – type 304.
Lugs: Malleable iron, ductile iron or stainless steel.
Bolts & Nuts: Stainless steel.
Gasket: Grade 60, neoprene or equal.

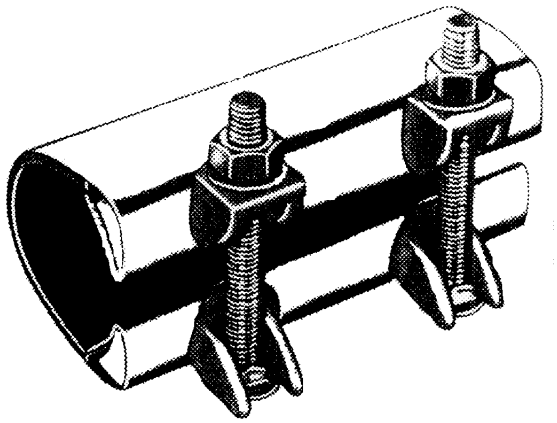

Size/Details	OUC Item ID	Manufacturer	Catalog Number
1¼” x 6”	073-05654	APAC Products	**442-166-6-SS**
		Dresser Mfg.	Style 118-0014
		Ford Meter Box	FSC – 17 x 6”
		JCM Ind.	110-0166-6-SS
		Mueller	220-6-166
		Power Seal	3151-AS
		Smith-Blair	245-0166-06-001

Revision Date: 10/27/98 (DSW)

OUC The *Reliable* One®

Material Specifications
Water Business Unit
ORLANDO UTILITIES COMMISION

Material Specifications F 1.7

Emergency Clamp – 1½” x 3”

AKA

Material:

Band: Stainless steel – type 304.
Lugs: Malleable iron, ductile iron or stainless steel.
Bolts & Nuts: Stainless steel.
Gasket: Grade 60, neoprene or equal.

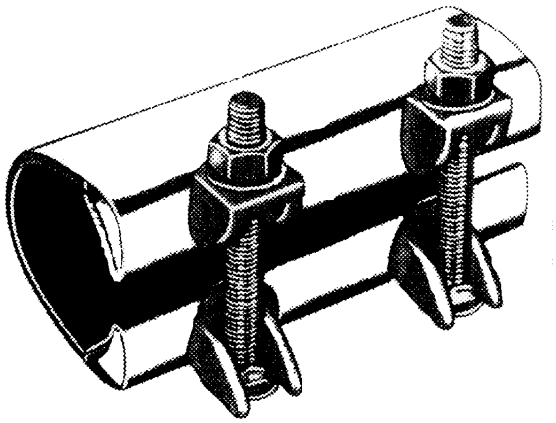

Size/Details	OUC Item ID	Manufacturer	Catalog Number
1½” x 3”	073-05364	APAC Products	**441-190-3-SS**
		Dresser Mfg.	Style 118-0018
		Ford Meter Box	FSC – 19 x 3”
		JCM Ind.	110-0190-3-SS
		Mueller	220-3-190
		Power Seal	3151-AS
		Smith-Blair	245-0190-03-001

Revision Date: 10/27/98 (DSW)

OUC The *Reliable* One®

Material Specifications
Water Business Unit
ORLANDO UTILITIES COMMISION

Material Specifications F 1.8

Emergency Clamp – 1½” x 6”

AKA

Material:

Band: Stainless steel – type 304.
Lugs: Malleable iron, ductile iron or stainless steel.
Bolts & Nuts: Stainless steel.
Gasket: Grade 60, neoprene or equal.

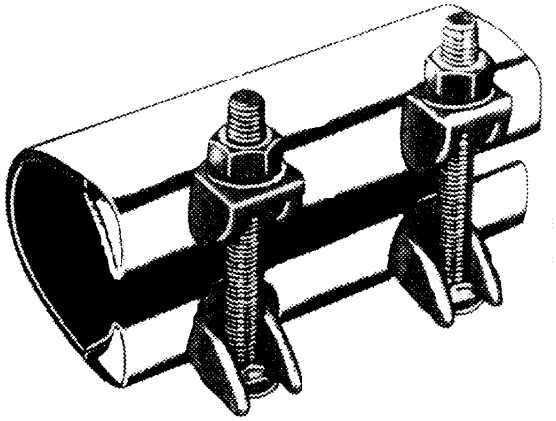

Size/Details	OUC Item ID	Manufacturer	Catalog Number
1½” x 6”	073-05664	APAC Products	**442-190-6-SS**
		Dresser Mfg.	Style 118-0018
		Ford Meter Box	FSC – 19 x 6”
		JCM Ind.	110-0190-6-SS
		Mueller	220-6-105
		Power Seal	3151-AS
		Smith-Blair	245-0190-06-001

Revision Date: 10/27/98 (DSW)

OUC The *Reliable* One®

Material Specifications
Water Business Unit
ORLANDO UTILITIES COMMISION

Material Specifications F 1.9

Emergency Clamp – 2” x 3”

AKA

Material:

Band: Stainless steel – type 304.
Lugs: Malleable iron, ductile iron or stainless steel.
Bolts & Nuts: Stainless steel.
Gasket: Grade 60, neoprene or equal.

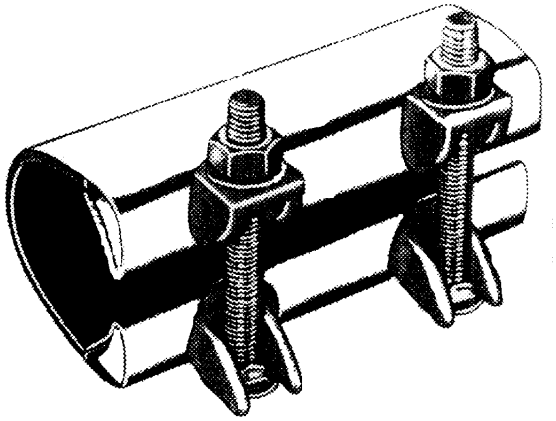

Size/Details	OUC Item ID	Manufacturer	Catalog Number
2” x 3”	073-05302	APAC Products	**441-238-3-SS**
		Dresser Mfg.	Style 118-0021
		Ford Meter Box	FSC – 24 x 3”
		JCM Ind.	110-0238-3-SS
		Mueller	220-3-237
		Power Seal	3151-AS
		Smith-Blair	245-0238-03-001

Revision Date: 10/27/98 (DSW)

OUC The *Reliable* One®

Material Specifications
Water Business Unit
ORLANDO UTILITIES COMMISION

Material Specifications F 1.10

Emergency Clamp – 2” x 6”

AKA

Material:

Band: Stainless steel – type 304.
Lugs: Malleable iron, ductile iron or stainless steel.
Bolts & Nuts: Stainless steel.
Gasket: Grade 60, neoprene or equal.

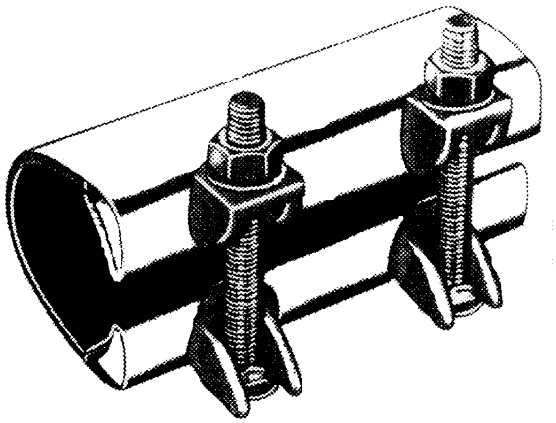

Size/Details	OUC Item ID	Manufacturer	Catalog Number
2” x 6”	073-05002	APAC Products	**442-238-6-SS**
		Dresser Mfg.	Style 118-0022
		Ford Meter Box	FSC – 24 x 6” or SS1-2.63 x 6”
		JCM Ind.	110-0238-6-SS
		Mueller	220-6-237
		Power Seal	3151-AS
		Smith-Blair	245-0238-06-001

Revision Date: 10/27/98 (DSW)

OUC The Reliable One

Material Specifications
Water Business Unit
ORLANDO UTILITIES COMMISION

Material Specifications F 1.11

Emergency (HDPE) Clamp – 2” x 8”

AKA Repair Clamp

Material:

Bands & Lugs: Stainless steel – type 304 – ASTM A 240.
Bolts & Nuts: Stainless steel – type 304.
Washers: Flat washers – stainless steel – type 304. Spring washers – stainless steel.

Gaskets: Virgin SBR per ASTM D-2000 compounded for water service.

Design:

Single band.

Special Features:

Clamp must be designed for and have the appropriate O.D. range to repair IPS diameter, 2” SDR 11 HDPE pipe, O.D. 2.375”. Clamp shall be 8” wide

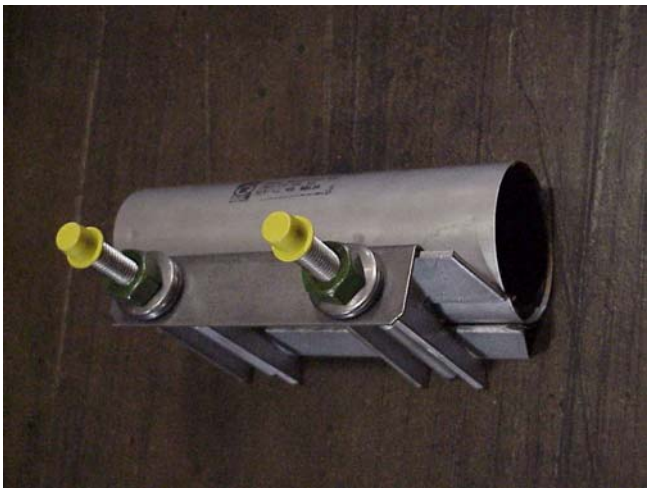

Size/Details	OUC Item ID	Manufacturer	Catalog Number
2”x 8”	073-05202	Romac	**SS1-H-2.50 x 8”**

Origin Date: 9/2/98 (DSW)
Revision Date: 7/13/99 (RNK)

OUC The Reliable One

Material Specifications
Water Business Unit
ORLANDO UTILITIES COMMISION

Material Specifications F 2.1

Emergency Clamp – 3” x 10”

AKA

Material:

Band: Stainless steel – type 304
Lugs: Malleable iron, ductile iron, or stainless steel.
Bolts & Nuts: Carbon steel, electro-galvanized with di-chromate seal or stainless steel.
Gasket: Grade 30, neoprene or equal.

Design:

Single band.

Special Features:

Clamp must accommodate 3” galvanized pipe (Schedule 40). Clamp width of 9” to 11¼” is acceptable.

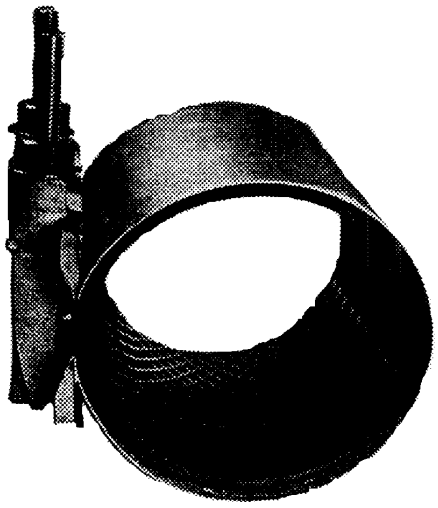

Size/Details	OUC Item ID	Manufacturer	Catalog Number
3” x 10”	073-05003	APAC Products	**401-10-375**
		Dresser Mfg.	**None**
		Ford Meter Box	SS1-3.70x10”
		JCM Ind.	None
		Mueller	500-9-346
		Power Seal	None
		Smith-Blair	226-035010-001

Revision Date: 10/30/98 (DSW)

OUC The Reliable One

Material Specifications
Water Business Unit
ORLANDO UTILITIES COMMISION

Material Specifications F 2.2

Emergency Clamp – 3” x 15”

AKA

Material:

Band: Stainless steel – type 304
Lugs: Malleable iron, ductile iron, or stainless steel.
Bolts & Nuts: Carbon steel, electro-galvanized with di-chromate seal or stainless steel.
Gasket: Grade 30, neoprene or equal.

Design:

Single band.

Special Features:

Clamp must accommodate 3” galvanized pipe (Schedule 40). Clamp width of 16” is acceptable.

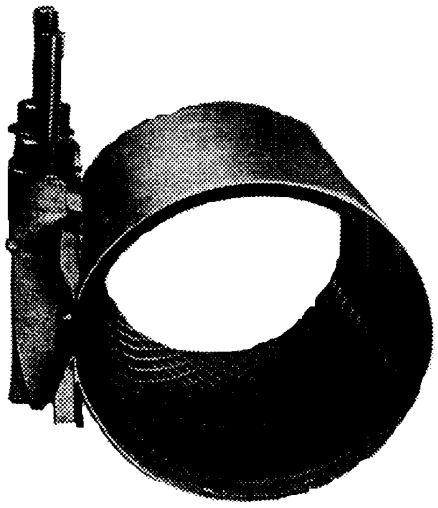

Size/Details	OUC Item ID	Manufacturer	Catalog Number
3” x 15”	073-05014	APAC Products	**None**
		Dresser Mfg.	**None**
		Ford Meter Box	SS1-3.70x16”
		JCM Ind.	131-0350-15
		Mueller	500-15-346
		Power Seal	(3A)3121-AS
		Smith-Blair	226-035015-001

Revision Date: 10/30/98 (DSW)

OUC The *Reliable* One®

Material Specifications
Water Business Unit
ORLANDO UTILITIES COMMISION

Material Specifications F 2.3

Emergency Clamp – 4” x 10”

AKA

Material:

Bands: Stainless Steel – type 304
Lugs: Malleable iron, ductile iron, or stainless steel.
Bolts & Nuts: **Stainless steel.**
Gasket: **Grade 30, neoprene or equal.**

Design:

Single band.

Special Features:

Clamp must have an adequate O.D. range to repair all classes of cast iron, ductile iron, and asbestos-cement pipe. Clamp minimum width of 10” is acceptable.

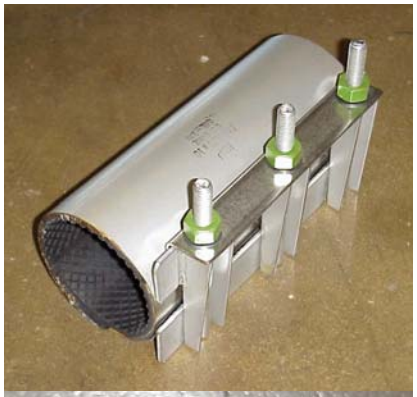

Size/Details	OUC Item ID	Manufacturer	Catalog Number
4” x 10”	073-05004	**APAC Products**	**402-10-557-SS**
		Dresser Mfg.	361-0002-002
		Ford Meter Box	**SS2-5.57 x 10”**
		JCM Ind.	None
		Mueller	510-9-470
		Power Seal	(4B) 3122-AS
		Romac	SS2-5.57 x 10”
		Smith-Blair	227-048010-001

Revision Date: **1/31/03 (RNK)**
11/9/98 (DSW)

OUC The Reliable One

Material Specifications
Water Business Unit
ORLANDO UTILITIES COMMISION

Material Specifications F 2.3a

Emergency (HDPE) Clamp – 4” x 12”

AKA Repair Clamp

Material:

Bands & Lugs: Stainless steel – type 304 – ASTM A 240.
Bolts & Nuts: Stainless steel – type 304.
Washers: Flat washers – stainless steel – type 304. Spring washers – stainless steel.

Gaskets: Virgin SBR per ASTM D-2000 compounded for water service.

Design:

Single band.

Special Features:

Clamp must be designed for and have the appropriate O.D. range to repair IPS diameter, 4” SDR 11 HDPE pipe, O.D. 4.50”. Clamp shall be 12” wide

Size/Details	OUC Item ID	Manufacturer	Catalog Number
4”x12”	073-05204	Romac	**SS1-H-4.50 x 12”**

Origin Date: 9/28/98 (DSW)
Revision Date: 7/13/99 (RNK)

OUC The Reliable One

Material Specifications
Water Business Unit
ORLANDO UTILITIES COMMISION

Material Specifications F 2.4

Emergency Clamp – 4” x 15”

AKA

Material:

Bands: Stainless Steel – type 304
Lugs: Malleable iron, ductile iron, or stainless steel.
Bolts & Nuts: Stainless steel.
Gasket: Grade 30, neoprene or equal.

Design:

Single band.

Special Features:

Clamp must have an adequate O.D. range to repair all classes of cast iron, ductile iron, and asbestos-cement pipe. Minimum width of 15” is acceptable.

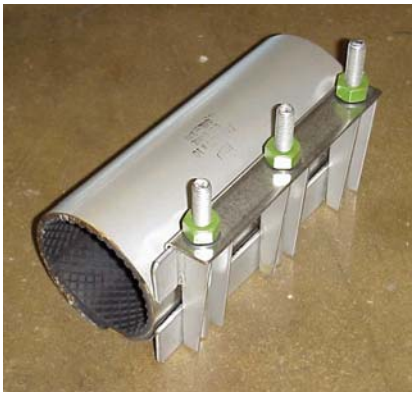

Size/Details	OUC Item ID	Manufacturer	Catalog Number
4” x 15”	073-05015	APAC Products	**402-15-557-SS**
		Dresser Mfg.	361-0004-002
		Ford Meter Box	**SS2-5.57 x 16”**
		JCM Ind.	102-0480-15-SS
		Mueller	510-15-470
		Power Seal	(4B) 3122-AS
		Romac	SS2-5.57 x 16”
		Smith-Blair	227-048015-001

Revision Date: **01/31/03 (RNK)**
11/9/98 (DSW)

OUC The Reliable One

Material Specifications
Water Business Unit
ORLANDO UTILITIES COMMISION

Material Specifications F 2.5

Emergency Clamp – 6” x 10”

AKA

Material:

Bands: Stainless Steel – type 304
Lugs: Malleable iron, ductile iron, or stainless steel.
Bolts & Nuts: Stainless steel.
Gasket: Grade 30, neoprene or equal.

Design:

Single band.

Special Features:

Clamp must have an adequate O.D. range to repair all classes of cast iron, ductile iron, and asbestos-cement pipe. Clamp minimum width of 10” is acceptable.

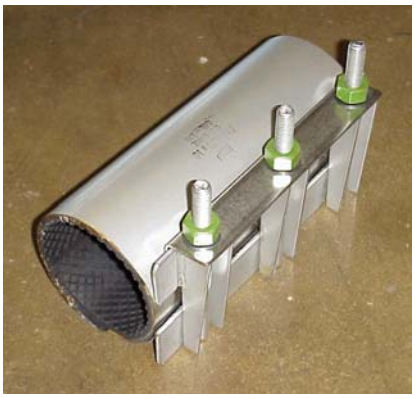

Size/Details	OUC Item ID	Manufacturer	Catalog Number
6” x 10”	073-05006	APAC Products	402-10-764-SS
		Dresser Mfg.	361-0008-002
		Ford Meter Box	SS2-7.64 x 10”
		JCM Ind.	None
		Mueller	510-9-675
		Power Seal	(6B) 3122-AS
		Romac	SS2-7.64 x 10”
		Smith-Blair	227-069010-001

Revision Date: 01/31/03 (RNK)
11/9/98 (DSW)

OUC The Reliable One

Material Specifications
Water Business Unit
ORLANDO UTILITIES COMMISION

Material Specifications F 2.6

Emergency Clamp – 6” x 20”

AKA

Material:

Bands: Stainless Steel – type 304
Lugs: Malleable iron, ductile iron, or stainless steel.
Bolts & Nuts: Stainless steel.
Gasket: Grade 30, neoprene or equal.

Design:

Single band.

Special Features:

Clamp must have an adequate O.D. range to repair all classes of cast iron, ductile iron, and asbestos-cement pipe. Clamp minimum width of 20” is acceptable.

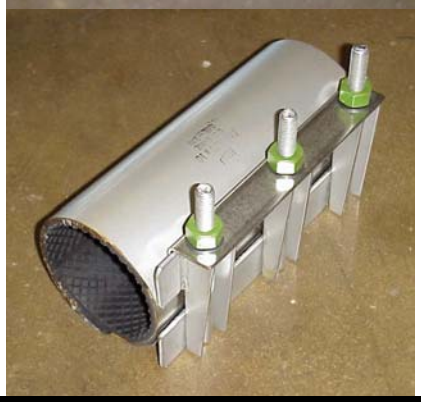

Size/Details	OUC Item ID	Manufacturer	Catalog Number
6” x 20”	073-05007	APAC Products	402-20-764-SS
		Dresser Mfg.	361-0011-002
		Ford Meter Box	SS2-7.64 x 20”
		JCM Ind.	102-0690-18-SS
		Mueller	510-18-675
		Power Seal	(6B) 3122-AS
		Romac	SS2-7.64 x 20”
		Smith-Blair	227-069020-001

Revision Date: 01/31/03 (RNK)
11/9/98 (DSW)

OUC The *Reliable* One®

Material Specifications
Water Business Unit
ORLANDO UTILITIES COMMISION

Material Specifications F 2.7

Emergency Clamp – 8” x 10”

AKA

Material:

Bands: Stainless Steel – type 304
Lugs: Malleable iron, ductile iron, or stainless steel.
Bolts & Nuts: Stainless steel.
Gasket: Grade 30, neoprene or equal.

Design:

Single band.

Special Features:

Clamp must have an adequate O.D. range to repair all classes of cast iron, ductile iron, and asbestos-cement pipe. Clamp minimum width of 10” is acceptable.

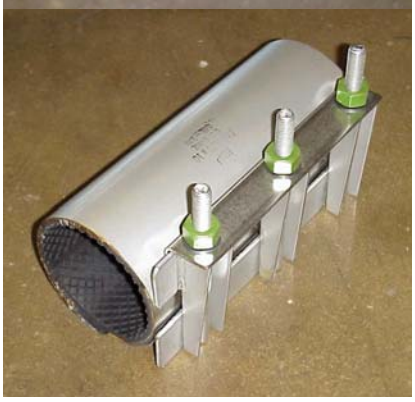

Size/Details	OUC Item ID	Manufacturer	Catalog Number
8” x 10”	073-05008	APAC Products	402-10-979-SS
		Dresser Mfg.	361-0014-002
		Ford Meter Box	SS2-9.79 x 10”
		JCM Ind.	None
		Mueller	510-10-888
		Power Seal	(8B) 3122-AS
		Romac	SS2-9.79 x 10”
		Smith-Blair	227-090510-001

Revision Date: 01-31-03 (RNK)
11/9/98 (DSW)

OUC The Reliable One

Material Specifications
Water Business Unit
ORLANDO UTILITIES COMMISION

Material Specifications F 2.8

Emergency Clamp – 8” x 20”

AKA

Material:

Bands: Stainless Steel – type 304
Lugs: Malleable iron, ductile iron, or stainless steel.
Bolts & Nuts: Stainless steel.
Gasket: Grade 30, neoprene or equal.

Design:

Single band.

Special Features:

Clamp must have an adequate O.D. range to repair all classes of cast iron, ductile iron, and asbestos-cement pipe. Clamp minimum width of 20” is acceptable.

Size/Details	OUC Item ID	Manufacturer	Catalog Number
8” x 20”	073-05009	APAC Products	402-20-979-SS
		Dresser Mfg.	361-0017-002
		Ford Meter Box	SS2-9.79 x 10”
		JCM Ind.	102-0905-18-SS
		Mueller	510-18-888
		Power Seal	(8B) 3122-AS
		Romac	SS2-9.79 x 20”
		Smith-Blair	227-090520-001

Revision Date: 01/31/03 (RNK)
11/9/98 (DSW)

OUC The Reliable One

Material Specifications
Water Business Unit
ORLANDO UTILITIES COMMISION

Material Specifications

F 2.9

Emergency Clamp – 10” x 10”

AKA

Material:

Bands: Stainless Steel – type 304
Lugs: Malleable iron, ductile iron, or stainless steel.
Bolts & Nuts: Stainless steel.
Gasket: Grade 30, neoprene or equal.

Design:

Single band.

Special Features:

Clamp must have an adequate O.D. range to repair all classes of cast iron, ductile iron, and asbestos-cement pipe. Clamp minimum width of 10” is acceptable.

Size/Details	OUC Item ID	Manufacturer	Catalog Number
10” x 10”	073-05010	APAC Products	402-10-1224-SS
		Dresser Mfg.	361-0020-002
		Ford Meter Box	None
		JCM Ind.	None
		Mueller	510-10-1105
		Power Seal	(10B) 3122-AS
		Romac	None
		Smith-Blair	227-111010-001

Revision Date: 01/31/03 (RNK)
11/9/98 (DSW)

OUC The Reliable One

Material Specifications
Water Business Unit
ORLANDO UTILITIES COMMISION

Material Specifications F 2.10

Emergency Clamp – 10” x 20”

AKA

Material:

Bands: Stainless Steel – type 304
Lugs: Malleable iron, ductile iron, or stainless steel.
Bolts & Nuts: Stainless steel.
Gasket: Grade 30, neoprene or equal.

Design:

Single band.

Special Features:

Clamp must have an adequate O.D. range to repair all classes of cast iron, ductile iron, and asbestos-cement pipe. Clamp minimum width of 20” is acceptable.

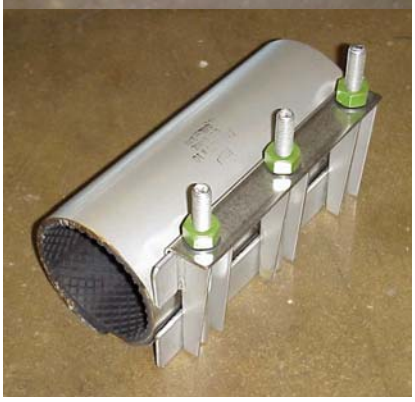

Size/Details	OUC Item ID	Manufacturer	Catalog Number
10” x 20”	073-05011	APAC Products	402-20-1224-SS
		Dresser Mfg.	361-0023-002
		Ford Meter Box	SS3-12.24 x 20”
		JCM Ind.	102-1110-18-SS
		Mueller	510-18-1105
		Power Seal	(10B) 3122-AS
		Romac	SS3-12.24 x 20”
		Smith-Blair	227-111020-001

Revision Date: 01/31/03 (RNK)
11/9/98 (DSW)

OUC The Reliable One

Material Specifications
Water Business Unit
ORLANDO UTILITIES COMMISION

Material Specifications F 2.11

Emergency Clamp – 12” x 10”

AKA

Material:

Bands: Stainless Steel – type 304
Lugs: Malleable iron, ductile iron, or stainless steel.
Bolts & Nuts: Stainless steel.
Gasket: Grade 30, neoprene or equal.

Design:

Single band.

Special Features:

Clamp must have an adequate O.D. range to repair all classes of cast iron, ductile iron, and asbestos-cement pipe. Clamp minimum width of 10” is acceptable.

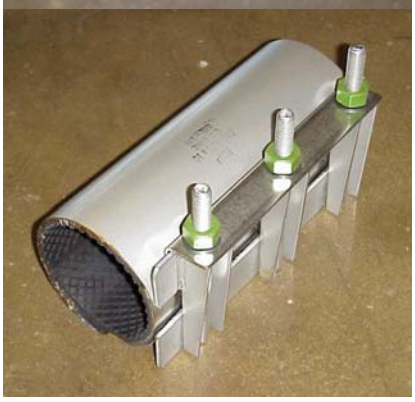

Size/Details	OUC Item ID	Manufacturer	Catalog Number
12” x 10”	073-05012	APAC Products	402-10-1434-SS
		Dresser Mfg.	361-0026-002
		Ford Meter Box	None
		JCM Ind.	None
		Mueller	510-10-1310
		Power Seal	(12B) 3122-AS
		Romac	None
		Smith-Blair	227-132010-001

Revision Date: 01/31/03 (RNK)
11/9/98 (DSW)

OUC The Reliable One

Material Specifications
Water Business Unit
ORLANDO UTILITIES COMMISION

Material Specifications F 2.12

Emergency Clamp – 12” x 18”

AKA

Material:

Bands: Stainless Steel – type 304
Lugs: Malleable iron, ductile iron, or stainless steel.
Bolts & Nuts: Stainless steel.
Gasket: Grade 30, neoprene or equal.

Design:

Single Band

Special Features:

Clamp must have an adequate O.D. range to repair all classes of cast iron, ductile iron, and asbestos-cement pipe. Clamp width of 18” is acceptable.

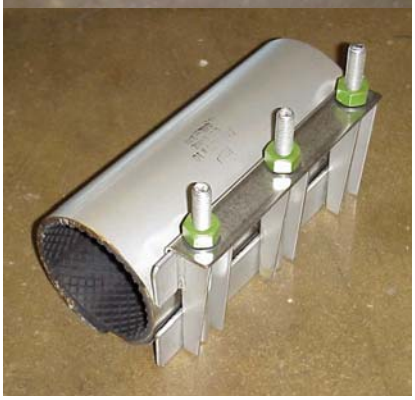

Size/Details	OUC Item ID	Manufacturer	Catalog Number
12” x 18”	073-05013	APAC Products	402-20-1434-SS
		Dresser Mfg.	361-0029-002
		Ford Meter Box	SS3-14.34 x 20”
		JCM Ind.	102-1320-18-SS
		Mueller	510-18-1310
		Power Seal	(12B) 3122-AS
		Romac	SS3-14.34 x 20”
		Smith-Blair	227-132020-001

Revision Date: 01/31/03 (RNK)
11/9/98 (DSW)

OUC The Reliable One

Material Specifications
Water Business Unit
ORLANDO UTILITIES COMMISION

Material Specifications F 2.13

Full Circle Collar Leak Repair Clamp – 2”

AKA

Material:

Bands: Stainless Steel – type 304

Bolts & Nuts: High strength low alloy steel ASTM A325 or A242 with heavy semi-finished hexagon nuts ASTM A563.

Gasket: Nitrile (Buna) lap type gasket with molded tapered ends to provide efficient equalized sealing at the lap joint on galvanized coupling to pipe connection. Off set gasket to fit pipe and coupling.

Design:

Single Band

Special Features:

Clamp must have an adequate O.D. range to repair Galvanized pipe.

Size/Details	OUC Item ID	Manufacturer	Catalog Number
2”	073-05200	Smith-Blair	229-000023807-000

Revision Date: 4/08/08 (RNK)

The *Reliable* One®

Material Specifications
Water Business Unit
ORLANDO UTILITIES COMMISION

Material Specifications F 3.1

Emergency Clamp – 16” x 12”

AKA

Material:

Band: Stainless steel – type 304
Lugs: Malleable iron, ductile iron, or stainless steel.
Bolts & Nuts: Carbon steel, electro-galvanized with di-chromate seal or stainless steel.
Gasket: Grade 30, neoprene or equal.

Design:

Double band.

Special Features:

Clamp must have an adequate O.D. range to repair all classes of cast iron, ductile iron pipe, and Class 100 asbestos-cement pipe.

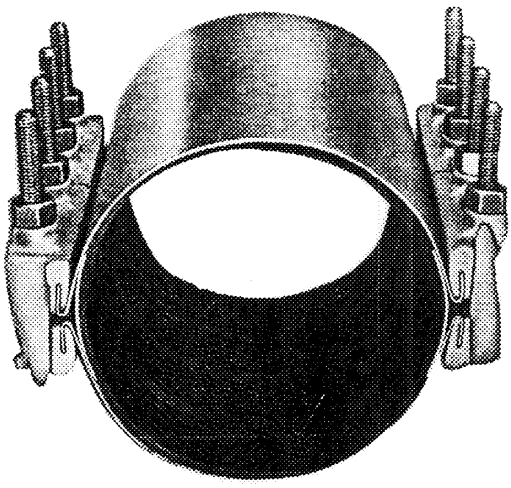

Size/Details	OUC Item ID
16” x 12”	073-05016

Manufacturer	Catalog Number
APAC Products	**None**
Dresser Mfg.	**None**
Ford Meter Box	SS3-18.30 x 12”
JCM Ind.	102-1740-12-SS
Mueller	510-12-1720
Power Seal	None
Smith-Blair	None

Revision Date: 11/9/98 (DSW)

OUC The Reliable One

Material Specifications
Water Business Unit
ORLANDO UTILITIES COMMISION

Material Specifications F 3.2

Emergency Clamp – 16” x 20”

AKA

Material:

Band: Stainless steel – type 304
Lugs: Malleable iron, ductile iron, or stainless steel.
Bolts & Nuts: Carbon steel, electro-galvanized with di-chromate seal or stainless steel.
Gasket: Grade 30, neoprene or equal.

Design:

Double band.

Special Features:

Clamp must have an adequate O.D. range to repair all classes of cast iron, ductile iron pipe, and Class 100 asbestos-cement pipe. Clamp width of 18” is acceptable.

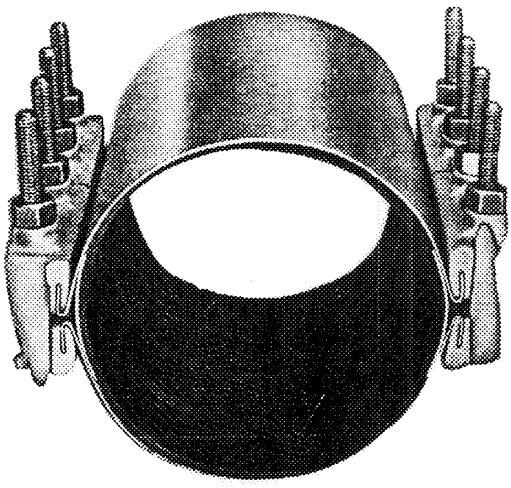

Size/Details	OUC Item ID	Manufacturer	Catalog Number
16’ x 20”	073-05017	APAC Products	**403-20-1857-SS**
		Dresser Mfg.	**None**
		Ford Meter Box	SS3-18.30 x 20”
		JCM Ind.	102-1740-18-SS
		Mueller	510-20-1720
		Power Seal	(16B) 3122-AS
		Smith-Blair	228-20171520-001

Revision Date: 11/9/98 (DSW)

OUC The Reliable One

Material Specifications
Water Business Unit
ORLANDO UTILITIES COMMISION

Material Specifications F 3.3

Emergency Clamp – 20” x 12”

AKA

Material:

Band: Stainless steel – type 304
Lugs: Malleable iron, ductile iron, or stainless steel.
Bolts & Nuts: Carbon steel, electro-galvanized with di-chromate seal or stainless steel.
Gasket: Grade 30, neoprene or equal.

Design:

Double band.

Special Features:

Clamp must have an adequate O.D. range to repair all classes of cast iron, ductile iron pipe, and Class 100 asbestos-cement pipe.

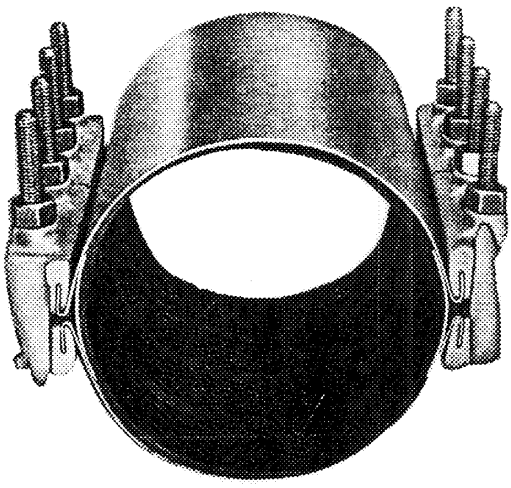

Size/Details	OUC Item ID
20” x 12”	073-05020

Manufacturer	Catalog Number
APAC Products	**None**
Dresser Mfg.	None
Ford Meter Box	SS3-22.80 x 12”
JCM Ind.	102-2160-12-SS
Mueller	510-12-2145
Power Seal	None
Smith-Blair	None

Revision Date: 11/9/98 (DSW)

OUC The *Reliable* One

Material Specifications
Water Business Unit
ORLANDO UTILITIES COMMISION

Emergency Clamp – 20” x 18”

AKA

Material:

Band: Stainless steel – type 304
Lugs: Malleable iron, ductile iron, or stainless steel.
Bolts & Nuts: Carbon steel, electro-galvanized with di-chromate seal or stainless steel.
Gasket: Grade 30, neoprene or equal.

Design:

Double band.

Special Features:

Clamp must have an adequate O.D. range to repair all classes of cast iron, ductile iron pipe, and Class 100 asbestos-cement pipe. Clamp width of 20” is acceptable.

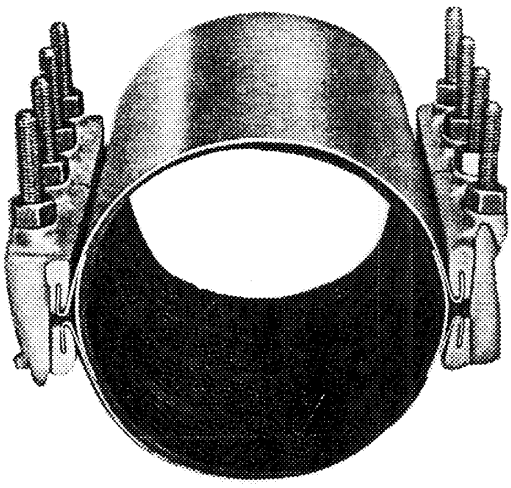

Size/Details	OUC Item ID	Manufacturer	Catalog Number
20” x 18”	073-05021	APAC Products	**403-20-2287-SS**
		Dresser Mfg.	360-5541-007 for D.I. 360-5544-007 for Univ.
		Ford Meter Box	SS3-22.80 x 20”
		JCM Ind.	102-2160-18-SS
		Mueller	510-18-2145
		Power Seal	(20A) 3122-AS
		Smith-Blair	228-20215220-001

Revision Date: 11/9/98 (DSW)

OUC The Reliable One

Material Specifications
Water Business Unit
ORLANDO UTILITIES COMMISION

Material Specifications F 3.5

Emergency Clamp – 24” x 12”

AKA

Material:

Band: Stainless steel – type 304
Lugs: Malleable iron, ductile iron, or stainless steel.
Bolts & Nuts: Carbon steel, electro-galvanized with di-chromate seal or stainless steel.
Gasket: Grade 30, neoprene or equal.

Design:

Double band.

Special Features:

Clamp must have an adequate O.D. range to repair all classes of cast iron, ductile iron pipe, and Class 100 asbestos-cement pipe.

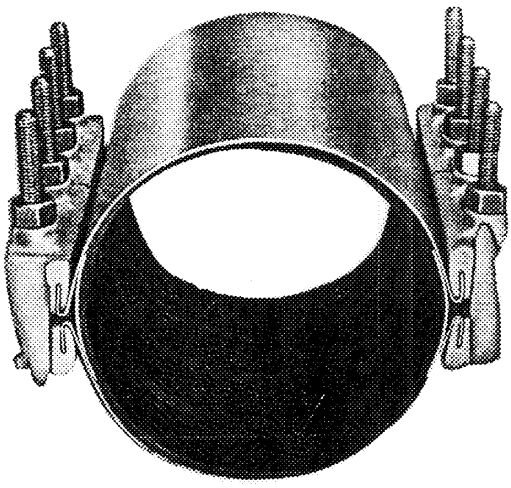

Size/Details	OUC Item ID	Manufacturer	Catalog Number
24” x 12’	073-05024	APAC Products	**None**
		Dresser Mfg.	**None**
		Ford Meter Box	SS3-27.00 x 12”
		JCM Ind.	102-2580-12-SS
		Mueller	510-12-2566
		Power Seal	(24A) 3123-AS
		Smith-Blair	None

Revision Date: 11/9/98 (DSW)

OUC The Reliable One

Material Specifications
Water Business Unit
ORLANDO UTILITIES COMMISION

Material Specifications F 3.6

Emergency Clamp – 24” x 18”

AKA

Material:

Band: Stainless steel – type 304
Lugs: Malleable iron, ductile iron, or stainless steel.
Bolts & Nuts: Carbon steel, electro-galvanized with di-chromate seal or stainless steel.
Gasket: Grade 30, neoprene or equal.

Design:

Double band.

Special Features:

Clamp must have an adequate O.D. range to repair all classes of cast iron, ductile iron pipe, and Class 100 asbestos-cement pipe. Clamp width of 20” is acceptable.

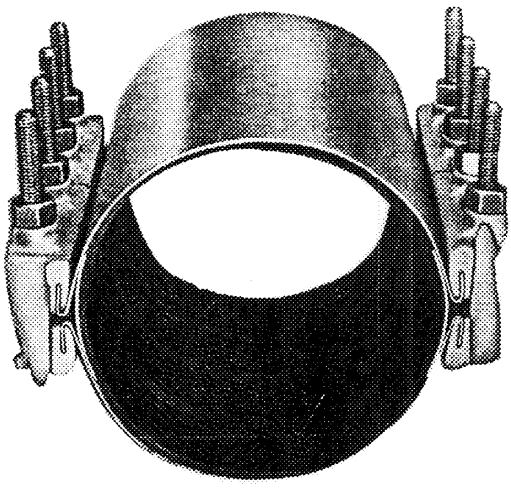

Size/Details	OUC Item ID
24” x 18”	073-05025

Manufacturer	Catalog Number
APAC Products	**403-20-2680-SS**
Dresser Mfg.	360-5547-007 for D.I. 360-5550-007 for Univ.
Ford Meter Box	SS3-27.00 x 20”
JCM Ind.	102-2580-18-SS
Mueller	510-18-2566
Power Seal	(24A) 3123-2566
Smith-Blair	228-30257020-001

Revision Date: 11/9/98 (DSW)

OUC The Reliable One

Material Specifications
Water Business Unit
ORLANDO UTILITIES COMMISION

Material Specifications F 3.7

Emergency Clamp – Extended Length 30” Long

AKA

Material:

Band: **Stainless steel – type 304**

Lugs: Malleable iron, ductile iron, or stainless steel.

Bolts & Nuts: Carbon steel, electro-galvanized with di-chromate seal or stainless steel.

Gasket: Grade 30, neoprene or equal.

Design:

Double band.

Special Features:

Clamp must have an adequate O.D. range to repair all classes of cast iron, ductile iron pipe, and class 100 asbestos-cement pipe. Clamp width of 30” is acceptable.

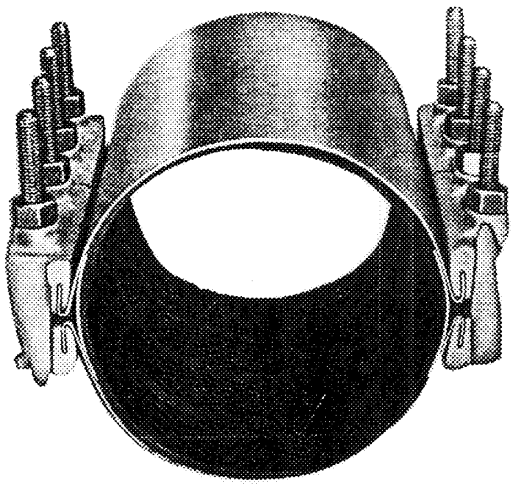

Size/Details	OUC Item ID
16” x 30”	073-05026
20” x 30”	073-05027
24” x 30”	073-05028
30” x 30”	073-05029
36” x 30”	073-05036

Manufacturer	**Catalog Number**
JCM Repair Clamp	Model 102
Ford Repair Clamp	Model FS3
Dresser Mfg.	
Smith-Blair	
Mueller	
Power Seal	
Romac Industries	

Revision Date: 4/03/08 (RNK)
12/15/99 (RNK)

OUC The *Reliable* One®

Material Specifications
Water Business Unit
ORLANDO UTILITIES COMMISION

Material Specifications F 4.1

Bell Joint Leak Clamp – 4” thru 12”

AKA

Material:

Bell & Spigot Ring: Ductile iron.

Bolts & Nuts: High strength, low alloy steel with heavy, semi-finished hexagon nuts conforming to ANSI/AWWA C111/A21.11-85 and the latest revisions thereto.

Gaskets: Grade 60, compounded to resist oil, natural gas, acids, alkalies, hydrocarbon fluids, water and other chemicals.

Special Features:

Clamp must fit both caulked and rubber ring joints for all classes of cast iron and ductile iron pipe.

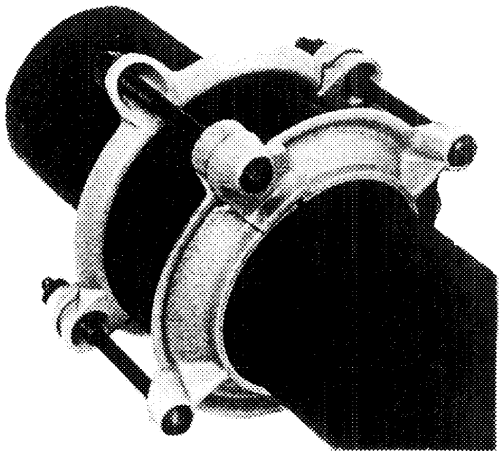

Size/Details	OUC Item ID
4”	073-05904
6”	073-05906
8”	073-05908
10”	073-05910
12”	073-05912

Manufacturer	**Catalog Number**
Romac	**516-5.00 (4”)**
	516-7.10 (6”)
	516-9.30 (8”)
	516-11.40 (10”)
	516-13.65 (12”)
Smith-Blair	274-0480-000 (4”)
	274-0690-000 (6”)
	274-0905-000 (8”)
	274-1110-000 (10”)
	274-1320-000 (12”)

Revision Date: 11/13/98 (BK)

OUC The *Reliable* One®

Material Specifications
Water Business Unit
ORLANDO UTILITIES COMMISION

Material Specifications F 4.2

Bell Joint Leak Clamp – 16” thru 24”

AKA

Material:

Bell & Spigot Ring: Ductile iron.

Bolts & Nuts: High strength, low alloy steel with heavy, semi-finished hexagon nuts conforming to ANSI/AWWA C111/A21.11-95 and the latest revisions thereto.

Gasket: Grade 60, compounded to resist oil, natural gas, acids, alkalies, hydrocarbon fluids, water and other chemicals.

Special Features:

Clamp must fit both caulked and rubber ring joints for all classes of cast iron and ductile iron pipe.

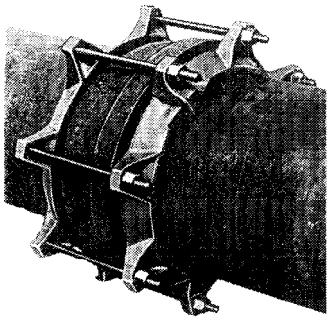

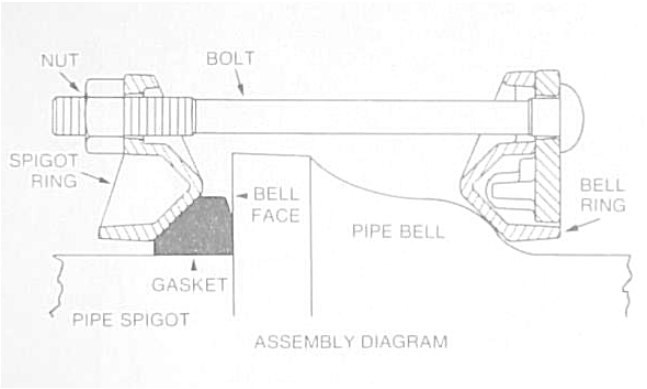

Size/Details	OUC Item ID	Manufacturer	Catalog Number
16”	073-05916	Smith-Blair	**274-1740-000 (16”)**
20”	073-05920		274-2160-000 (20”)
24”	073-05924		274-2580-000 (24”)

Revision Date: 2/24/00 (RNK)
11/13/98 (RNK)

OUC The Reliable One

Material Specifications
Water Business Unit
ORLANDO UTILITIES COMMISION